Gripper

WIDE OPENING RADIAL MOTION
Double Acting

Barrington Automation

B-1W

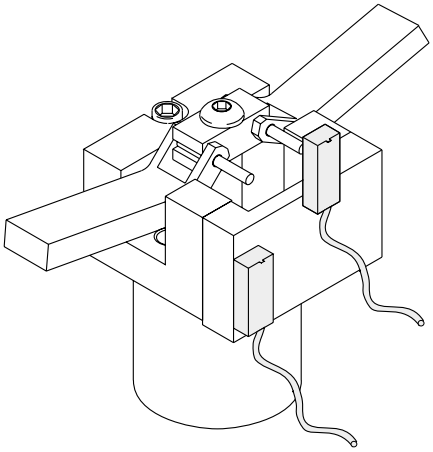

Proximity sensors preassembled for open & closed positions (see page 33)

TECHNICAL DATA:	
Weight	11 oz.
Max Rec. Load	2 lbs
Force @ 80 psi	8 lbs @ F
Operating Pressure	60-100 PSI

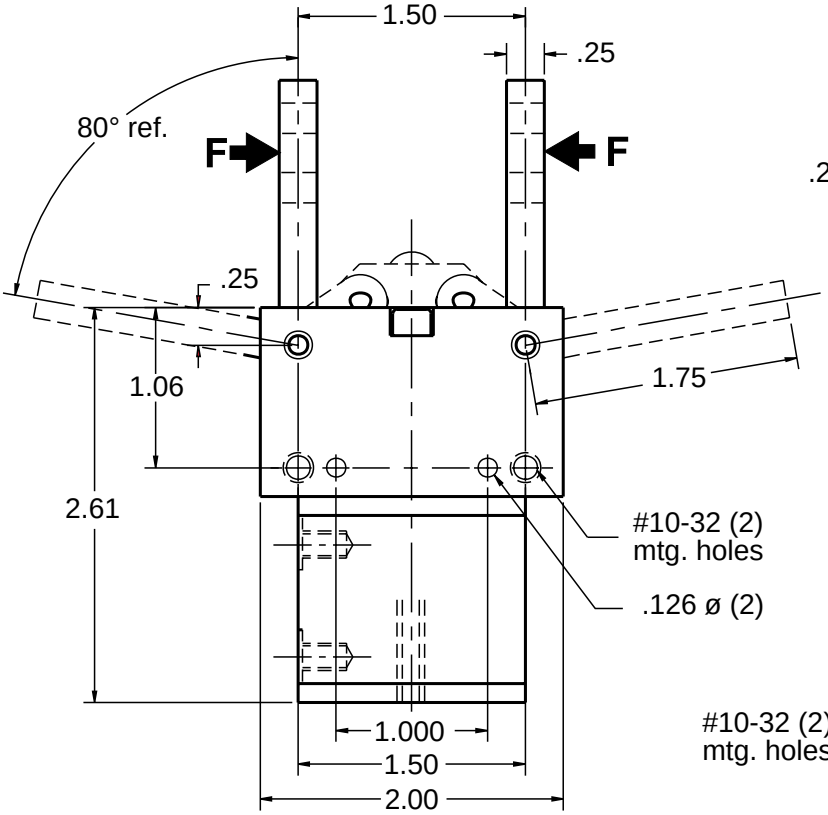

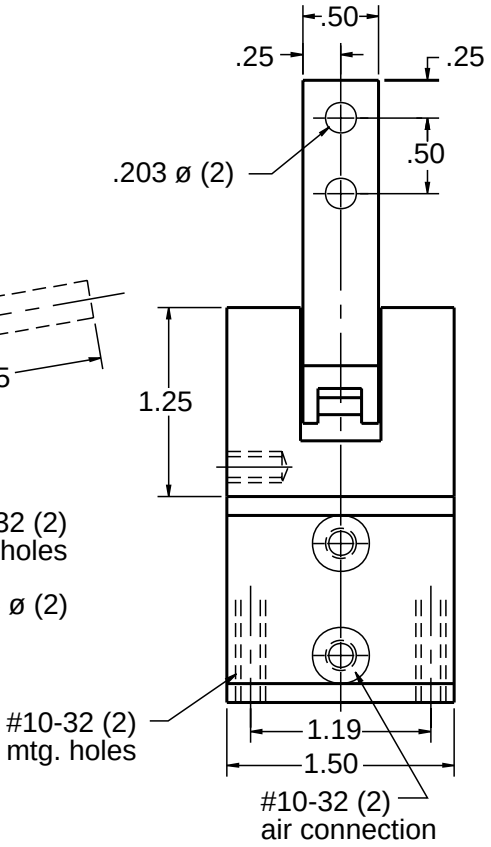

780 E. Tek Drive Crystal Lake, IL 60014 Telephone 815/477-1400 FAX 815/477-9818
web: www.barrington-atn.com e-mail:info@barrington-atn.com